Cambridge International AS & A Level

Cambridge International Examinations
Cambridge International Advanced Subsidiary and Advanced Level

CANDIDATE NAME

CENTRE NUMBER

CANDIDATE NUMBER

8144039938

PHYSICS **9702/31**

Paper 3 Advanced Practical Skills 1 **October/November 2018**

2 hours

Candidates answer on the Question Paper.

Additional Materials: As listed in the Confidential Instructions.

READ THESE INSTRUCTIONS FIRST

Write your Centre number, candidate number and name on all the work you hand in.
Write in dark blue or black pen.
You may use an HB pencil for any diagrams or graphs.
Do not use staples, paper clips, glue or correction fluid.
DO **NOT** WRITE IN ANY BARCODES.

Answer **both** questions.
You will be allowed to work with the apparatus for a maximum of one hour for each question.
You are expected to record all your observations as soon as these observations are made, and to plan the presentation of the records so that it is not necessary to make a fair copy of them.
You are reminded of the need for good English and clear presentation in your answers.

Electronic calculators may be used.
You may lose marks if you do not show your working or if you do not use appropriate units.

Additional answer paper and graph paper should be used only if it becomes necessary to do so.

At the end of the examination, fasten all your work securely together.
The number of marks is given in brackets [ ] at the end of each question or part question.

For Examiner's Use	
1	
2	
Total	

This document consists of **11** printed pages and **1** blank page.

© UCLES 2018

CAMBRIDGE International Examinations

You may not need to use all of the materials provided.

1 In this experiment, you will investigate the motion of a wooden strip.

(a) • Set up the apparatus as shown in Fig. 1.1.

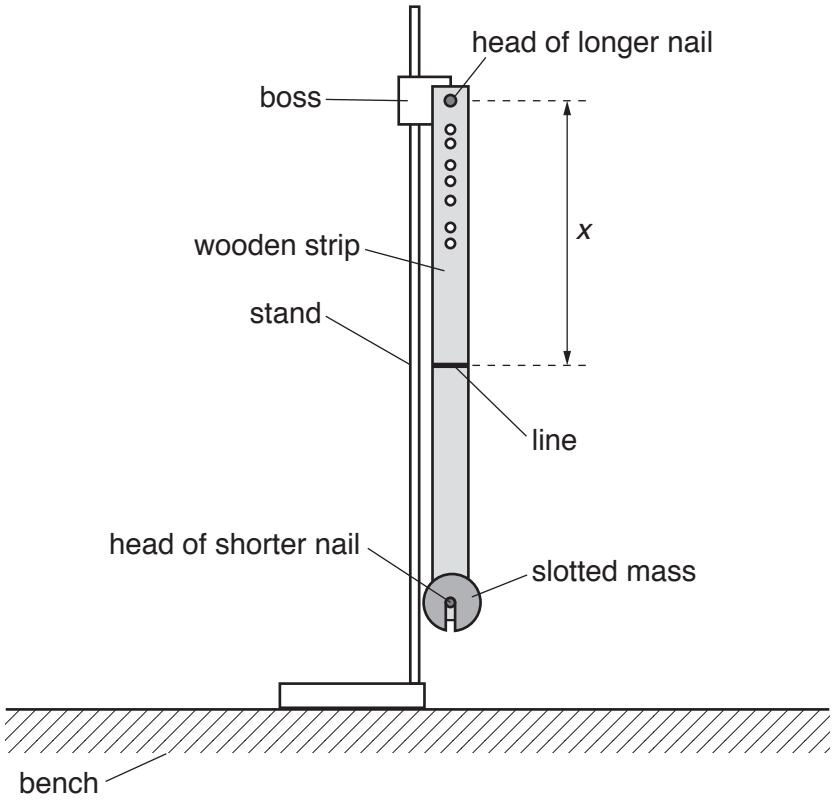

Fig. 1.1

- The longer nail should be held in the boss and be placed through the top hole in the strip.
- The shorter nail should be placed through the bottom hole in the strip to support the slotted mass.
- The distance between the longer nail and the line on the strip is *x*, as shown in Fig. 1.1.

  Measure and record *x*.

x = ... [1]

(b) • Pull the bottom of the strip through a short distance, as shown in Fig. 1.2.

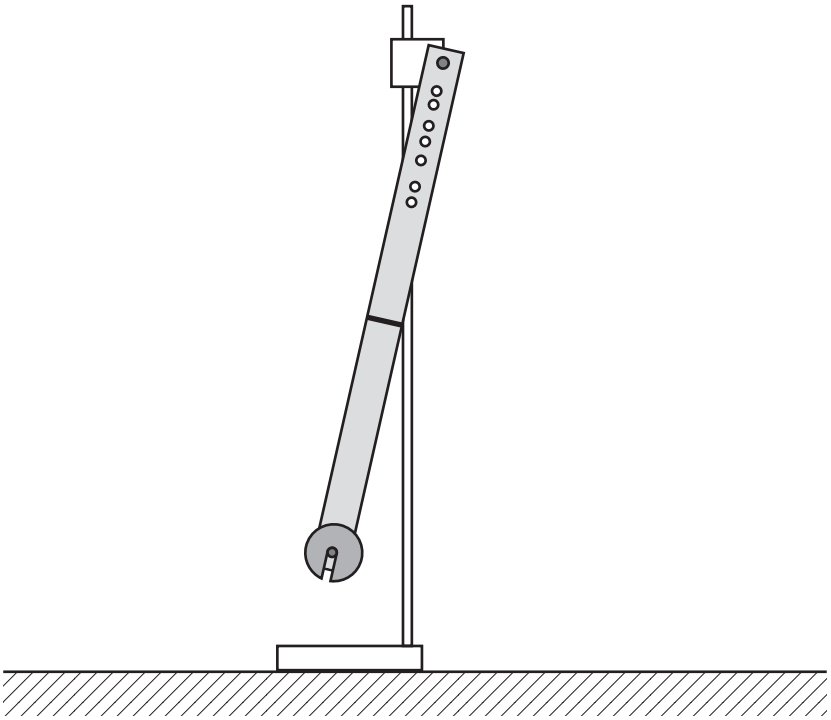

Fig. 1.2

- Release the strip. The strip will oscillate.
- Determine the period T of these oscillations.

T = ... [1]

(c) Vary x by placing the longer nail through different holes in the strip. Measure and record x and T. Repeat until you have six sets of values.

Record your results in a table. Include values of T^2x and x^2 in your table.

[10]

(d) **(i)** Plot a graph of T^2x on the y-axis against x^2 on the x-axis. [3]

(ii) Draw the straight line of best fit. [1]

(iii) Determine the gradient and y-intercept of this line.

gradient = ...

y-intercept = ...

[2]

© UCLES 2018

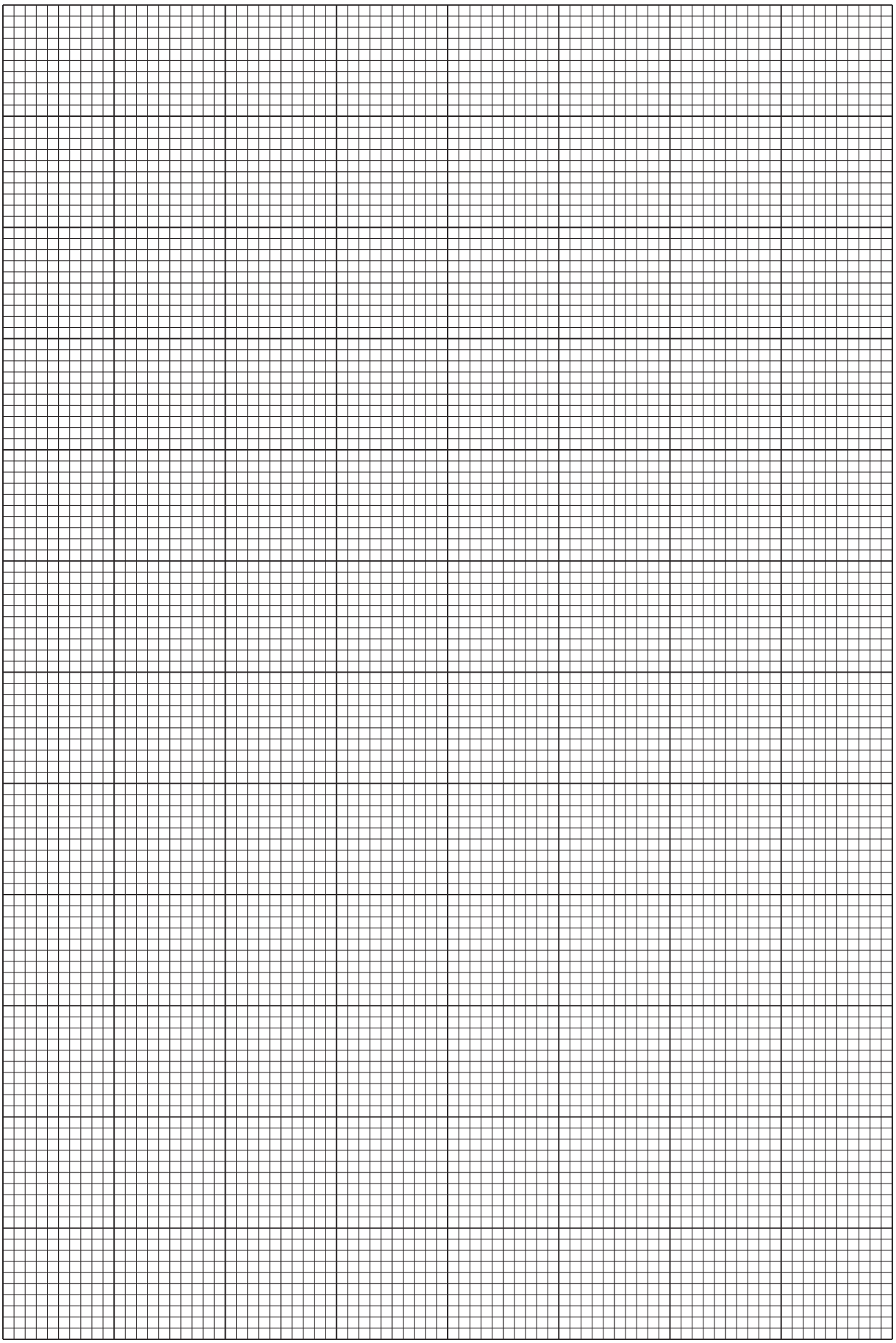

© UCLES 2018

(e) It is suggested that the quantities T and x are related by the equation

$$T^2x = Ax^2 + B$$

where A and B are constants.

Using your answers in **(d)(iii)**, determine the values of A and B.
Give appropriate units.

A = ...

B = ...
[2]

[Total: 20]

© UCLES 2018

You may not need to use all of the materials provided.

2 In this experiment, you will investigate the movement of a chain of paper clips.

(a) (i) You have been provided with a chain of paper clips.

Measure and record the mass M of the chain.

$M =$ ..... [1]

(ii) Using your answer in **(a)(i)**, calculate the mass m of **one** paper clip.

$m =$ ..... [1]

(iii) Justify the number of significant figures that you have given for your value of m.

.....

.....

..... [1]

(b) (i) You have been provided with two identical spheres of modelling clay.

Measure and record the mass S of one of the spheres.

$S =$ ..... [1]

(ii) Calculate c where

$$c = \frac{S}{m}.$$

$c =$ ..... [1]

(c) (i) • Place the wooden strip on the bench so that one end of the strip overhangs the bench, as shown in Fig. 2.1.

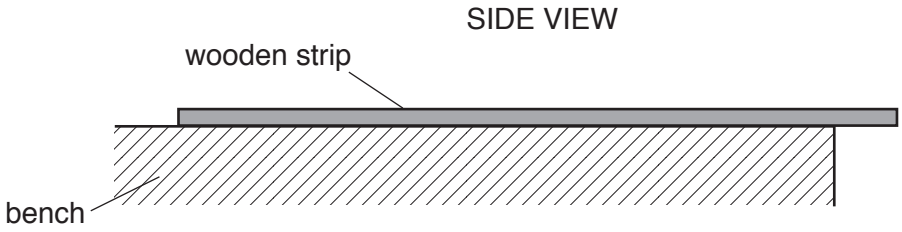

Fig. 2.1

• Place the chain on the wooden strip and place one of the spheres on the paper clip at the end of the chain, as shown in Fig. 2.2. The sphere must **not** touch the wooden strip.

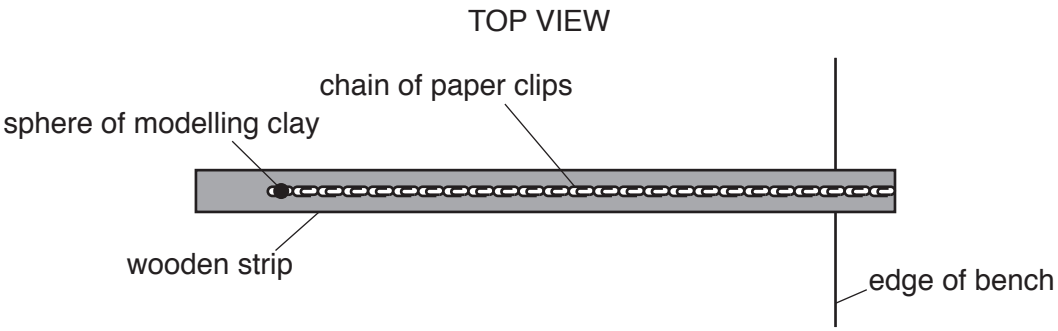

Fig. 2.2

• Gradually move the paper clips off the end of the wooden strip so that they hang down, as shown in Fig. 2.3.

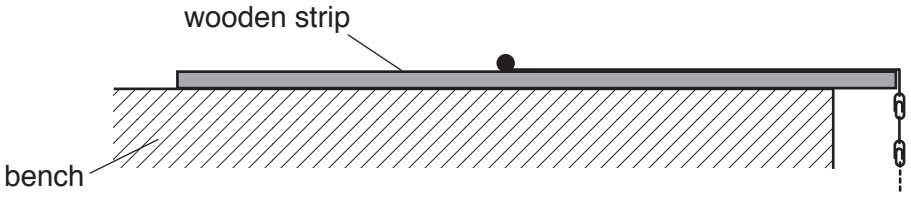

Fig. 2.3

• When the chain starts to slip, count and record the number p of paper clips hanging off the end of the wooden strip and the number q of paper clips **remaining** on the strip.

p = ...

q = ...

[2]

© UCLES 2018

(ii) Estimate the percentage uncertainty in your value of *p*.

percentage uncertainty = ... [1]

(d) • Replace the chain on the wooden strip and place both spheres on the paper clips at the end of the strip, as shown in Fig. 2.4.

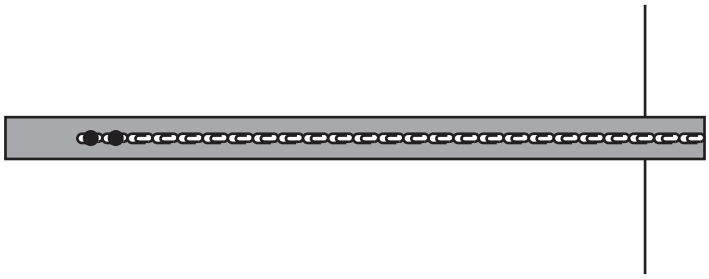

Fig. 2.4

• Determine *p* and *q*.

p = ...

q = ...
[2]

(e) It is suggested that the relationship between p, q and c is

$$p = k(q + nc)$$

where n is the number of spheres on the chain and k is a constant.

(i) Using your data, calculate two values of k.

first value of k = ...

second value of k = ...
[1]

(ii) Explain whether your results support the suggested relationship.

.....

.....

.....

..... [1]

© UCLES 2018

(f) (i) Describe four sources of uncertainty or limitations of the procedure for this experiment.

1. .....

.....

2. .....

.....

3. .....

.....

4. .....

.....

[4]

(ii) Describe four improvements that could be made to this experiment. You may suggest the use of other apparatus or different procedures.

1. .....

.....

2. .....

.....

3. .....

.....

4. .....

.....

[4]

[Total: 20]

© UCLES 2018

BLANK PAGE

Permission to reproduce items where third-party owned material protected by copyright is included has been sought and cleared where possible. Every reasonable effort has been made by the publisher (UCLES) to trace copyright holders, but if any items requiring clearance have unwittingly been included, the publisher will be pleased to make amends at the earliest possible opportunity.

To avoid the issue of disclosure of answer-related information to candidates, all copyright acknowledgements are reproduced online in the Cambridge International Examinations Copyright Acknowledgements Booklet. This is produced for each series of examinations and is freely available to download at www.cie.org.uk after the live examination series.

Cambridge International Examinations is part of the Cambridge Assessment Group. Cambridge Assessment is the brand name of University of Cambridge Local Examinations Syndicate (UCLES), which is itself a department of the University of Cambridge.

© UCLES 2018